Two Days Hands On Workshop on

Computational Modeling & Simulation of Hydrogen Fuel Cell Systems

January 23 and 24, 2023

Venue : RV College of Engineering (RVCE), Bengaluru

Organised By :

DHIO Research & Engineering Pvt Ltd., Bengaluru, India

RV College of Engineering, Bengaluru, India
Centre for Hydrogen and Green Technology &
Centre of Excellence in e-mobility

Preamble :

With pressure on industries to move to zero emissions, a strong focus has been put on the research and development of hydrogen applications for decarbonization. Most countries including India, want to achieve net zero by 2070. One way is to rely on Hydrogen and Fuel Cells. Green Hydrogen generated through electrolysis using electricity from renewable sources is one of the hot topics of research

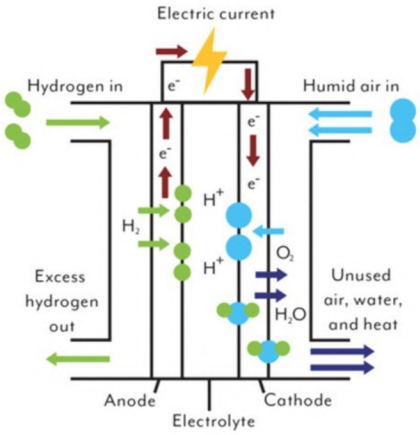

About the Workshop:

The proposed workshop aims to focus on computational modeling and simulation of Hydrogen fuel cells starting from conceptual design, sizing, scaling, sensitivity analysis, optimization, simulation associated with heat transfer, fluid dynamics, and thermodynamic models and systems. Along with the theory, this workshop will provide hands-on experience of simulating components and subsystems. A multiscale simulation approach will be demonstrated along with the membrane development. Anode-cathode reactions at nanoscale, battery thermal management, stack behavior, and macro-scale applicaitons are the other topics of discussion.

Brief topics covered in the Workshop

- Fundamentals of Hydrogen Fuel Cell Systems
- Components of Fuel Cells and Fuel Cell Systems
- Modeling and Simulation of Proton Exchange Membrane (PEM) Fuel Cell
- Thermal and water management in PEM Fuel Cells
- Multiscale approach to fuel cell development including membrane development
- Fast Transient Analysis of PEM Fuel Cells
- Optimization of Humidifier Design
- Water Electrolysis
- Battery Thermal Management
- Other Fuel Cell Systems

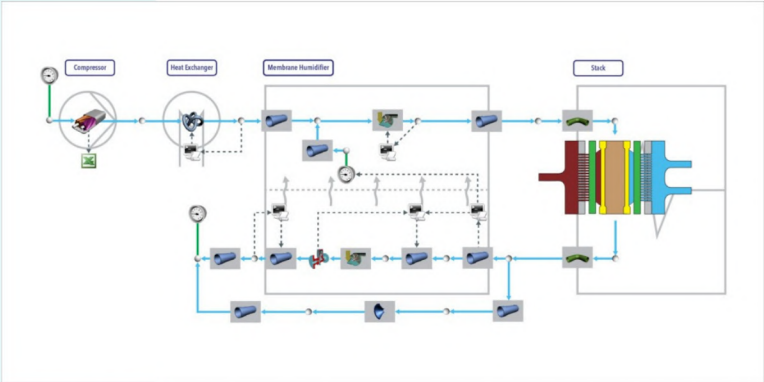

PROTON-EXCHANGE MEMBRANE FUEL CELL AIR SIDE USING FLOWNEX

Technology Partner

FLOWNEX®
SIMULATION ENVIRONMENT

Flownex® is the so ware of choice in the design, analysis, and optimization of hydrogen technology. From water electrolysis to transient evaluations of fuel cells, Flownex® speeds up the design process and decreases the cost of development.

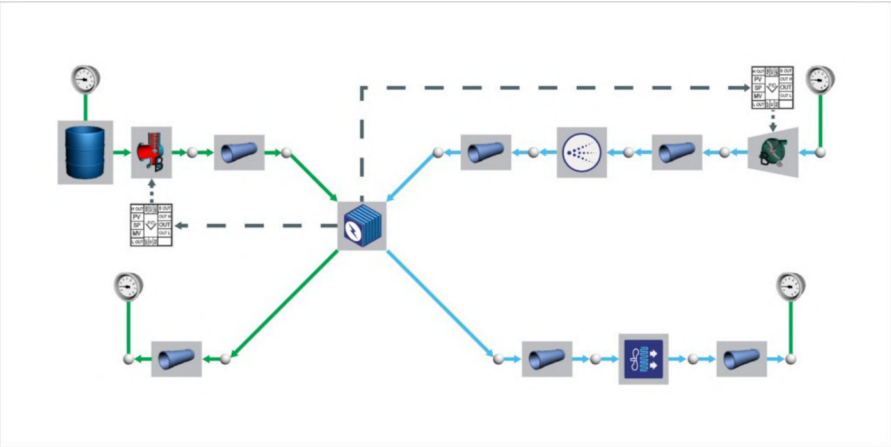

About DHIO Research and Engineering Pvt Ltd.

DHIO Research and Engineering Pvt Ltd, is a collaborative engineering simulations and R&D Company based out of Bangalore, India. DHIO caters the need of advanced computational simulation associated with material, design and manufacturing for industries across the world. DHIO has a team of experts with experience in design, re-design, engineering, simulation, optimisation from atomic level (nanoscale) to macro scale of application engineering. DHIO working closely with various organisations on sustainable energy development associated with Hydrogen, SCo2, Carbon Capture, etc.

More details on www.dhioresearch.com

About RV College of Engineering, Bangaluru

RV College of Engineering® (RVCE) established in 1963 is one of the earliest self-financing engineering colleges in the country. The institution is run by Rashtreeya Shikshana Samithi Trust ® (RSST) a non-profit Trust. RVCE is an autonomous college. Currently, the institution offers 15 bachelor programs and 14 master programs. All the departments have Research Centres, affiliated to Visvesvaraya Technological University (VTU) Belagavi. The institution has set itself a Vision of Leadership in Quality Technical Education, Interdisciplinary Research & Innovation, with a focus on Sustainable and Inclusive Technology.

Recent awards and achievements include 89th rank in the National Institutional Ranking Framework (NIRF – 2022), QS-IGUAGE – 'Diamond' University Ranking (2021-2024), 'Excellent' rating in ARIIA Ranking – 2021 and NPTEL (Local Chapter) 'AA' Rating and Maximum number of NPTEL Stars. The institution has to its credit over 1500 National and International Journal and Conference publications, 114 patents (15 granted, 49 published, and 50 filed), and completed sponsored research and consultancy projects worth Rs. 20 crores in the last three years. The institution has established six Centres of Competence and 18 Centres of Excellence in various domains. The students have won awards and accolades in national and international competitions.

Centre for Hydrogen and Green technology (CH2GT) was established in March 2021 with the intention of promoting the implementation of renewable energy systems, providing green energy solutions to industrial and societal needs, and developing well-to-wheel carbon-neutral renewable/green hydrogen energy systems. Center of Excellence in Electric Mobility (CoEeM) is established with the objective to create a platform for academia and industry to interact, innovate and co-create newer technologies for the EV industry, all in India.

More Details : www.rvce.edu.in

Registration Fee

Industry : INR 5,000.00 + GST (18%)
Academic Faculty : INR 4,000.00 + GST (18%)
Students : INR 2,000.00 + GST (18%)

Workshop Co-ordinators

Mr. Santhosh N L,
Director & CEO, DHIO Research
Phone : +91 9591994642
Email : nls@dhioresearch.com

Dr. Ujwal S Meda,
CH2GT (RVCE), +91 8050842363

Dr. M N Dinesh,
CoEeM (RVCE), +91 9845063663

Link to Register :
https://forms.office.com/r/Qk5dyGExmi

Email : nls@dhioresearch.com